REV	CHANGE RECORD AND DATE	CH
A	RELEASED 9-11-91	

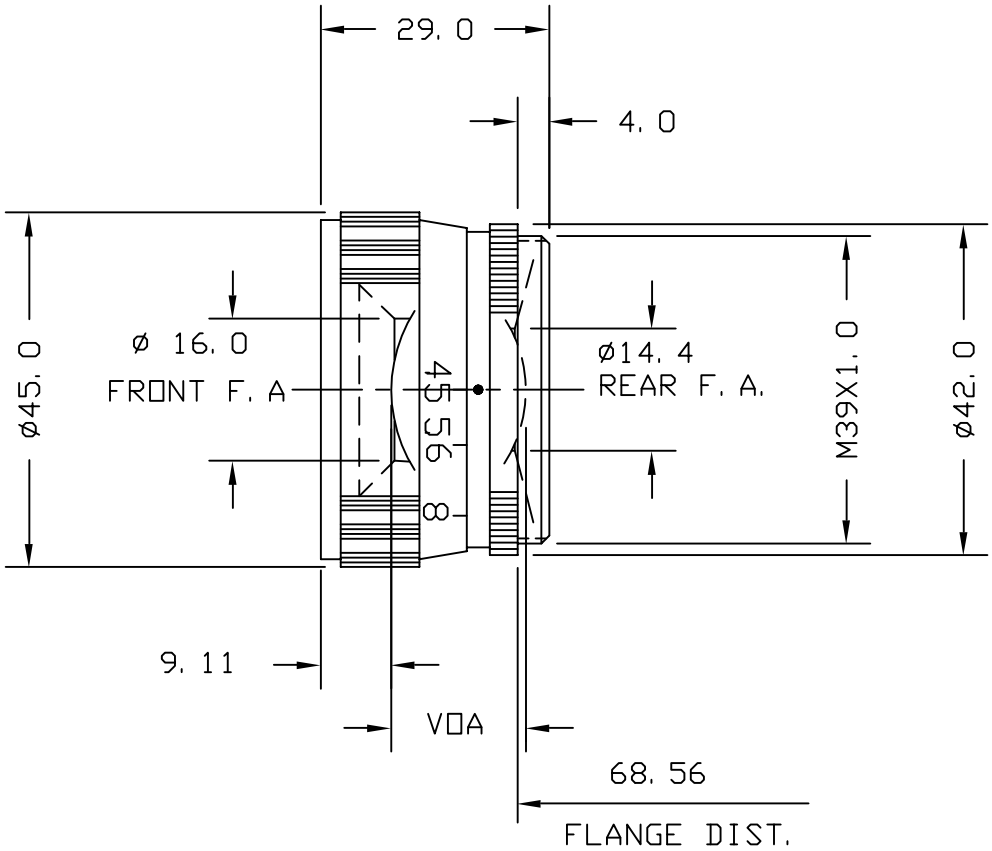

EFL = 75.64

BFL_{∞} = 67.12

FFL_{∞} = 68.25

VOA = 17.12

NEXT ASSY. | USED ON

SIMILIAR TO 1-5456

MATERIAL

FINISH

UNLESS OTHERWISE SPECIFIED
DIMENSIONS ARE IN MM AND INCLUDE
CHEMICALLY APPLIED OR PLATED FINISHES

TOLERANCES AS FOLLOWS
.XX ±.13
.X ±.25

ANGLES ±30'
CONCENTRICITY .07 TIR

BREAK ALL SHARP EDGES
.13 MIN .30 MAX

SCALE 1X
DR. A. K.
CH.
APP.
DATE DR. 9-11-91

0.0 inch 1.0
0.0 mm 25.0

NAVITAR
ROCHESTER, NEW YORK

75mm f/4.5
DYOTAR LENS

SIZE		REV
A	1-11551_OL	A