NOTES:

1. SEE MELLES GRIOT APPLICATION NOTE FOR APERTURE (f/NUMBER) SCALE CALIBRATION, P/N 43299.
2. DIMENSIONS: INCH [MILLIMETERS]

REVISIONS					APPROVALS
REV.	DATE	BY	DESCRIPTION	ECO#	APP'D / DATE
X1	01/12/97	JK	PRELIMINARY	.	
A	02/18/97	JK	RELEASE FOR PRODUCTION		DMB 2/25/97
B	02/28/97	JK	1.940 WAS: 2.166, 3.044 WAS: 3.270, 3.945 WAS: 4.171, 10.091 WAS: 10.317 AND 4.124 WAS: 3.898	1602	DMB 3/4/97
C	06/26/97	JK	9.634 [244.70] WAS: 10.091 [256.31] ADDED: ±5%	1678	

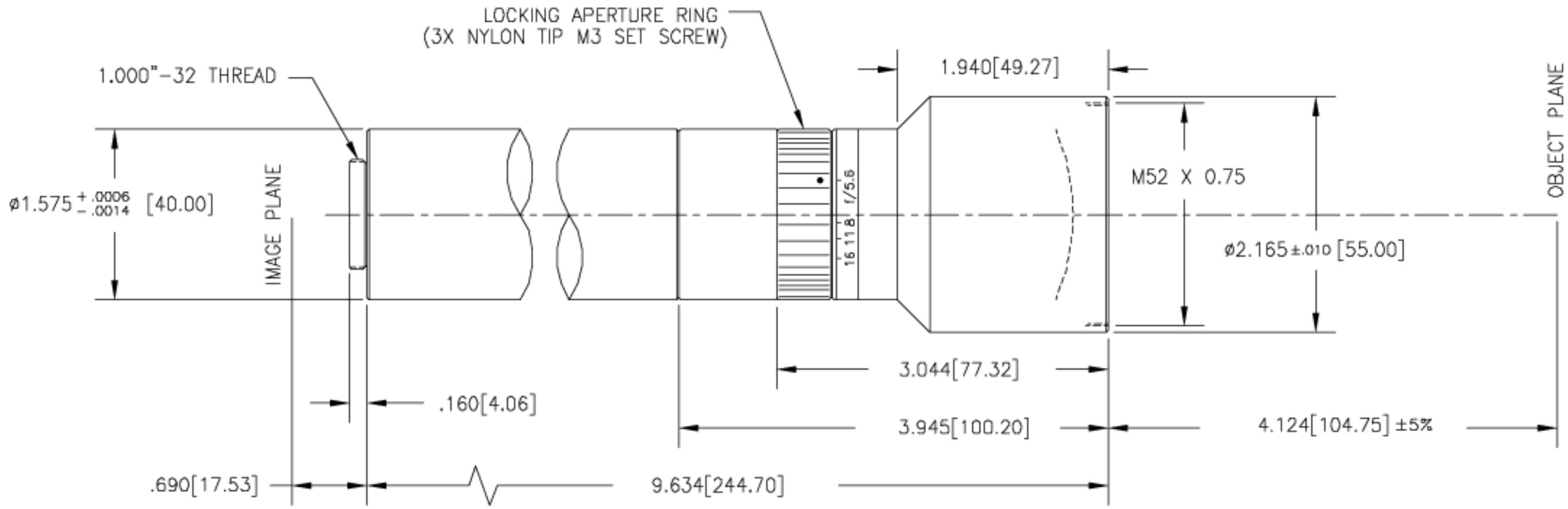

MELLES GRIOT
ROCHESTER
55 SCIENCE PARKWAY
ROCHESTER NY 14620

59LGN703

Lens data and drawing provided by:
NAVITAR, INC.
200 Commerce Drive, Rochester, NY 14623
800-828-6778 www.navitar.com

SCALE 1/1	QTY./ASSY –	FILE: J:\43280\43280-S3.DWG